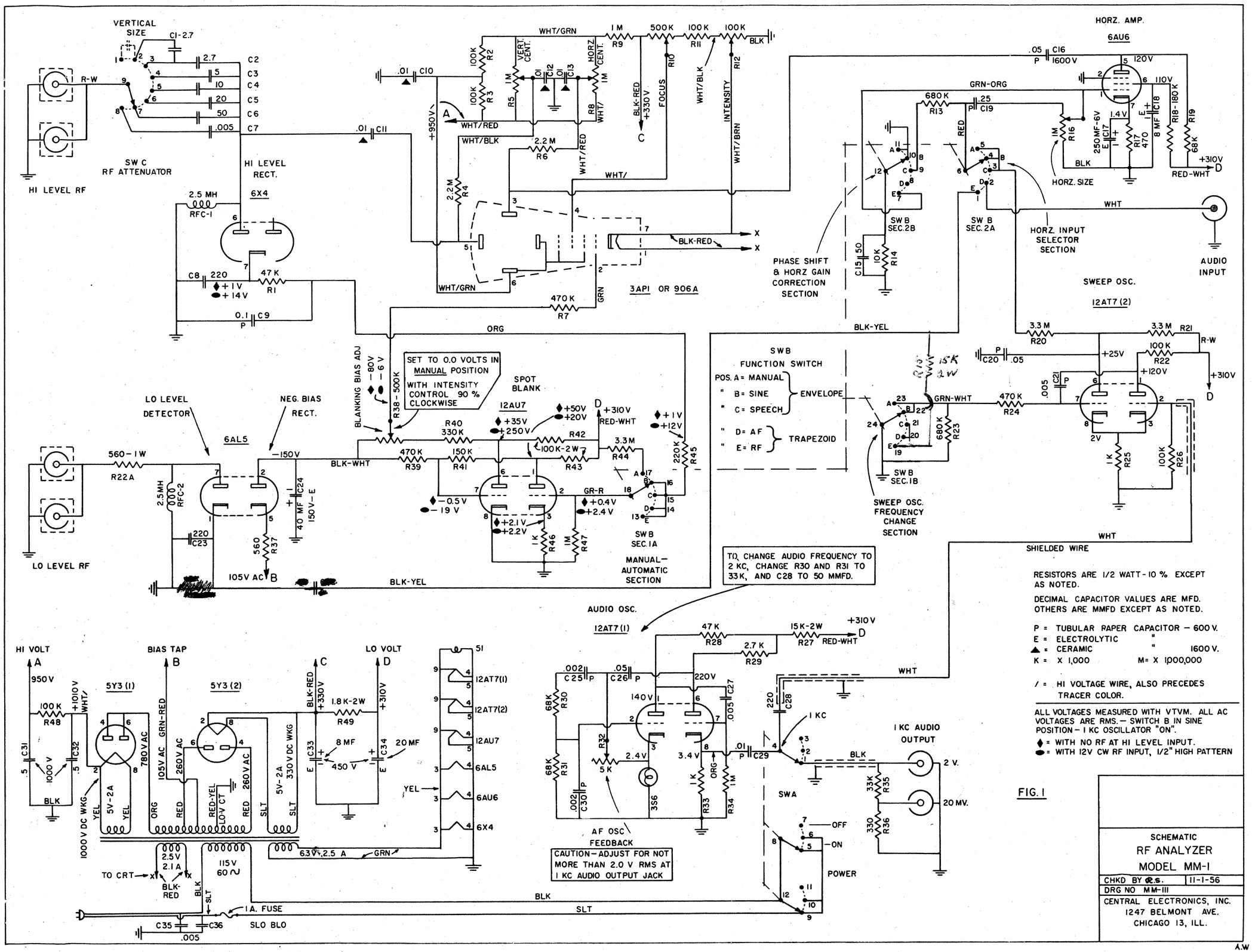
VERTICAL SIZE
C1-2.7
SW C RF ATTENUATOR
HI LEVEL RF
HI LEVEL RECT.
6X4
RFC-1
2.5 MH
C8 220
47 K R1
+1V
+14V
0.1 C9
WHT/GRN
1 M R9
500 K R10
100 K R11
100 K R12
BLK
VERT. CENT.
HORZ. CENT.
FOCUS
INTENSITY
BLK-RED +330 V
WHT/BLK
WHT/BRN
WHT/RED
WHT/
+950 V
2.2 M R6
2.2 M R4
3AP1 OR 906A
470 K R7
GRN
ORG
BLANKING BIAS ADJ
-80V
-6V
R38-500K
SET TO 0.0 VOLTS IN MANUAL POSITION WITH INTENSITY CONTROL 90 % CLOCKWISE
SPOT BLANK
12AU7
+50V
+20V
+310V RED-WHT
+35V
+250V
R40 330 K
R42
100 K-2W
R43
3.3 M R44
+1V
+12V
220 K R45
470 K R39
150 K R41
BLK-WHT
GR-R
+0.4V
+2.4V
-0.5V
-19 V
+2.1V
+2.2V
1K R46
1M R47
SW B SEC. 1A
MANUAL-AUTOMATIC SECTION
LO LEVEL DETECTOR
NEG. BIAS RECT.
6AL5
560-1W R22A
2.5MH RFC-2
220 C23
560 R37
105V AC
-150V
40 MF C24 150V-E
LO LEVEL RF
BLK-YEL
HORZ. AMP.
6AU6
120V
110V
GRN-ORG
680 K R13
.25 C19
250 MF-6V C17
1.4V
470 R17
8 MF C18
R18-180 K
R19
68 K
+310V RED-WHT
HORZ. SIZE
SW B SEC. 2B
SW B SEC. 2A
HORZ. INPUT SELECTOR SECTION
PHASE SHIFT & HORZ GAIN CORRECTION SECTION
C15 50
10 K R14
WHT
AUDIO INPUT
SWEEP OSC.
12AT7 (2)
BLK-YEL
3.3 M R20
3.3 M R21
R-W
100 K R22
+25V
+120V
+310V
C20 .05
C21
470 K R24
GRN-WHT
680 K R23
SW B SEC. 1B
SWEEP OSC. FREQUENCY CHANGE SECTION
1K R25
100 K R26
SHIELDED WIRE
TO CHANGE AUDIO FREQUENCY TO 2 KC, CHANGE R30 AND R31 TO 33K, AND C28 TO 50 MMFD.
AUDIO OSC.
12AT7 (1)
47 K R28
15 K-2W R27
+310V RED-WHT
2.7 K R29
220V
140V
C25 .002
C26 .05
68 K R30
68 K R31
R32 5 K
2.4V
3.4V
3S6
1K R33
1M R34
C29 .01
C28 220
1 KC
1 KC AUDIO OUTPUT
2 V.
20 MV.
33K R35
330 R36
SWA
OFF
ON
POWER
AF OSC FEEDBACK
CAUTION-ADJUST FOR NOT MORE THAN 2.0 V RMS AT 1 KC AUDIO OUTPUT JACK
HI VOLT
950 V
100 K R48
+1010 V WHT
5Y3 (1)
5Y3 (2)
BIAS TAP
LO VOLT
1.8 K-2W R49
+330V
+310V
8 MF
450 V
20 MF
C31 .5
C32 .5
1000 V
780 V AC
105V AC
260 V AC
5V-2A
330 V DC WKG
1000 V DC WKG
YEL
ORG
RED
RED-YEL
LO-V CT
SLT
BLK
2.5 V 2.1 A
115 V 60 ~
TO CRT
BLK-RED
6.3V 2.5 A
GRN
1 A. FUSE
SLO BLO
C35 .005
C36
BLK
SLT
51
12AT7(1)
12AT7(2)
12AU7
6AL5
6AU6
6X4
RESISTORS ARE 1/2 WATT-10 % EXCEPT AS NOTED.
DECIMAL CAPACITOR VALUES ARE MFD. OTHERS ARE MMFD EXCEPT AS NOTED.
P = TUBULAR RAPER CAPACITOR - 600 V.
E = ELECTROLYTIC "
▲ = CERAMIC " 1600 V.
K = X 1,000 M= X 1,000,000
/ = HI VOLTAGE WIRE, ALSO PRECEDES TRACER COLOR.
ALL VOLTAGES MEASURED WITH VTVM. ALL AC VOLTAGES ARE RMS.- SWITCH B IN SINE POSITION - 1 KC OSCILLATOR "ON".
◆ = WITH NO RF AT HI LEVEL INPUT.
● = WITH 12V CW RF INPUT, 1/2" HIGH PATTERN
SCHEMATIC
RF ANALYZER
MODEL MM-1
CHKD BY R.S.
11-1-56
DRG NO MM-111
CENTRAL ELECTRONICS, INC.
1247 BELMONT AVE.
CHICAGO 13, ILL.
A.W

FIG. 1